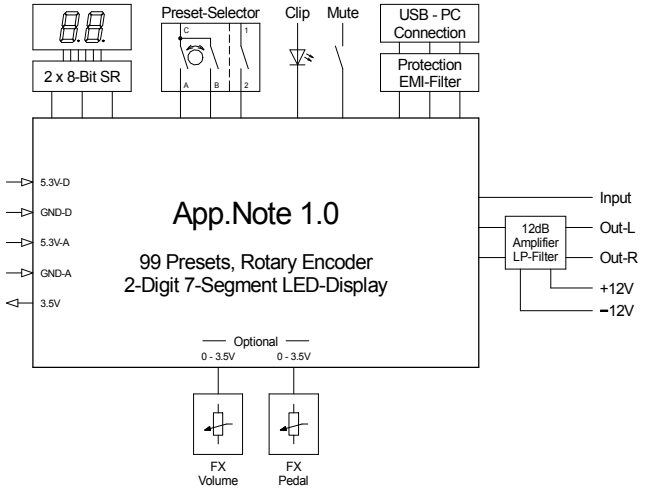
Preset-Selector
Clip
Mute
USB - PC Connection
Protection EMI-Filter
2 x 8-Bit SR
5.3V-D
GND-D
5.3V-A
GND-A
3.5V
App.Note 1.0
99 Presets, Rotary Encoder
2-Digit 7-Segment LED-Display
Input
12dB Amplifier LP-Filter
Out-L
Out-R
+12V
−12V
Optional
0 - 3.5V
0 - 3.5V
FX Volume
FX Pedal

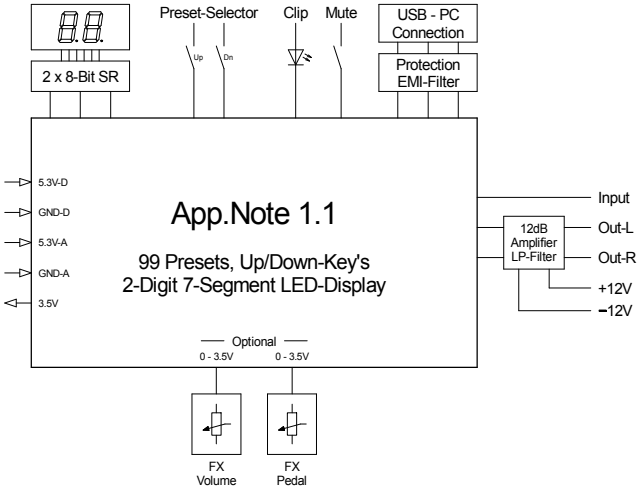
Preset-Selector
Up
Dn
Clip
Mute
USB - PC Connection
Protection EMI-Filter
2 x 8-Bit SR
5.3V-D
GND-D
5.3V-A
GND-A
3.5V
App.Note 1.1
99 Presets, Up/Down-Key's
2-Digit 7-Segment LED-Display
Input
12dB Amplifier LP-Filter
Out-L
Out-R
+12V
−12V
Optional
0 - 3.5V
0 - 3.5V
FX Volume
FX Pedal

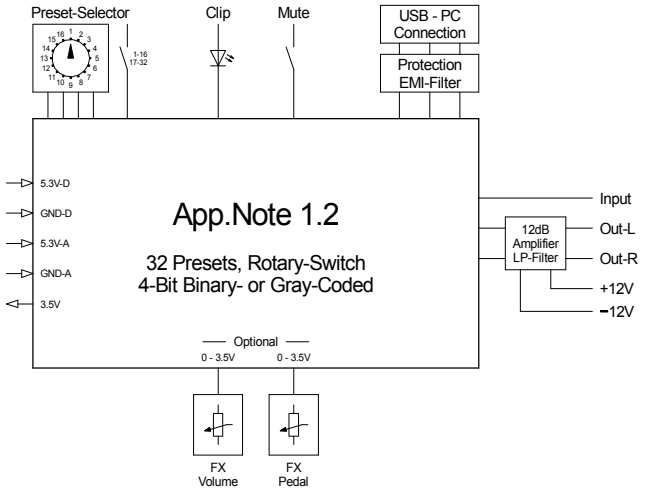
Preset-Selector
1-16
17-32
Clip
Mute
USB - PC Connection
Protection EMI-Filter
5.3V-D
GND-D
5.3V-A
GND-A
3.5V
App.Note 1.2
32 Presets, Rotary-Switch
4-Bit Binary- or Gray-Coded
Input
12dB Amplifier LP-Filter
Out-L
Out-R
+12V
−12V
Optional
0 - 3.5V
0 - 3.5V
FX Volume
FX Pedal

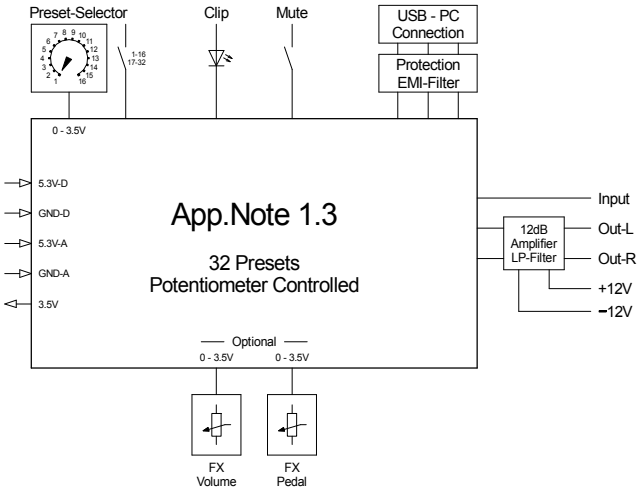
Preset-Selector
1-16
17-32
Clip
Mute
USB - PC Connection
Protection EMI-Filter
0 - 3.5V
5.3V-D
GND-D
5.3V-A
GND-A
3.5V
App.Note 1.3
32 Presets
Potentiometer Controlled
Input
12dB Amplifier LP-Filter
Out-L
Out-R
+12V
−12V
Optional
0 - 3.5V
0 - 3.5V
FX Volume
FX Pedal

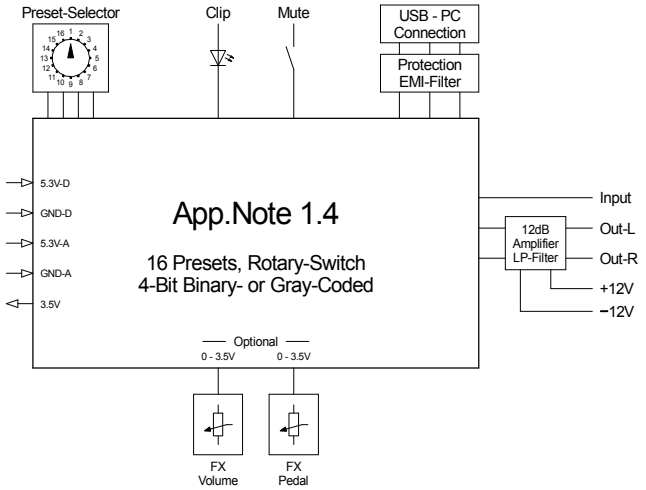
Preset-Selector
Clip
Mute
USB - PC Connection
Protection EMI-Filter
5.3V-D
GND-D
5.3V-A
GND-A
3.5V
App.Note 1.4
16 Presets, Rotary-Switch
4-Bit Binary- or Gray-Coded
Input
12dB Amplifier LP-Filter
Out-L
Out-R
+12V
−12V
Optional
0 - 3.5V
0 - 3.5V
FX Volume
FX Pedal

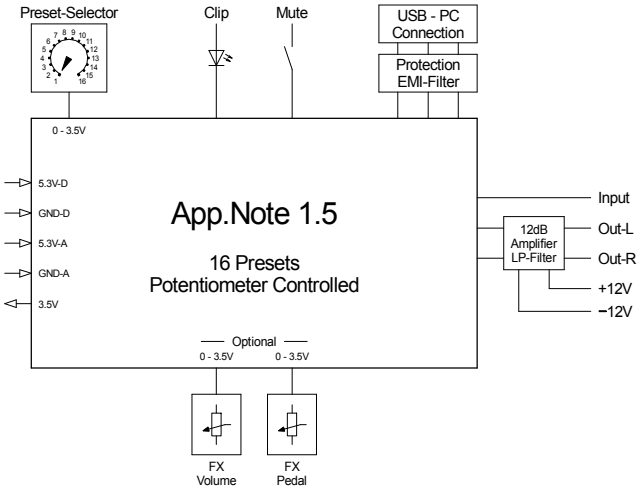
Preset-Selector
Clip
Mute
USB - PC Connection
Protection EMI-Filter
0 - 3.5V
5.3V-D
GND-D
5.3V-A
GND-A
3.5V
App.Note 1.5
16 Presets
Potentiometer Controlled
Input
12dB Amplifier LP-Filter
Out-L
Out-R
+12V
−12V
Optional
0 - 3.5V
0 - 3.5V
FX Volume
FX Pedal

MME, Klaus Mueller
Pocking / Germany
Phone: 0049 8531 41506
baderoeder@freenet.de

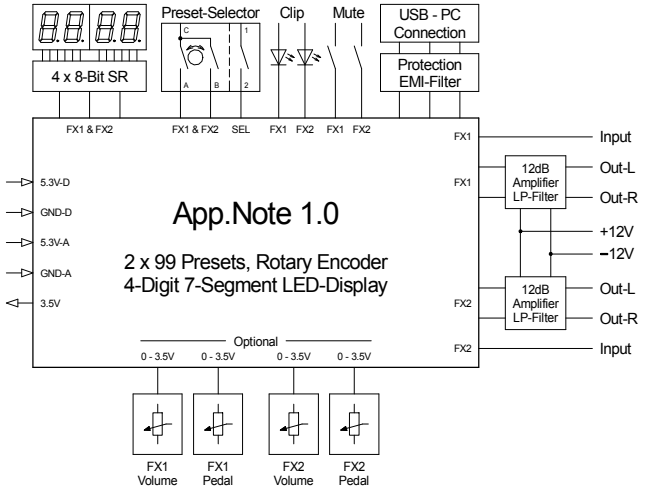

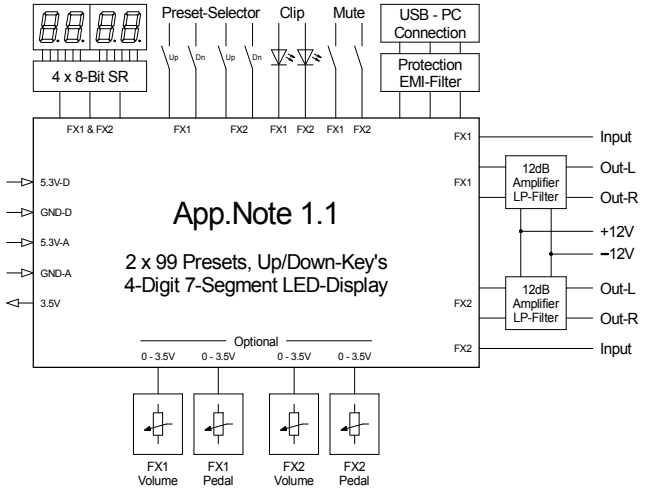

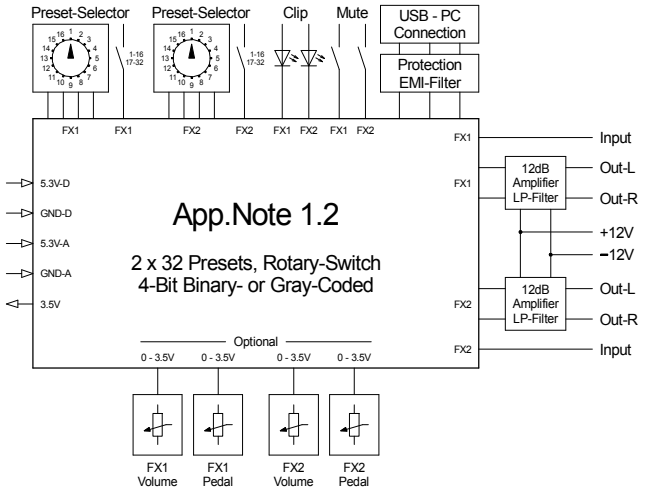

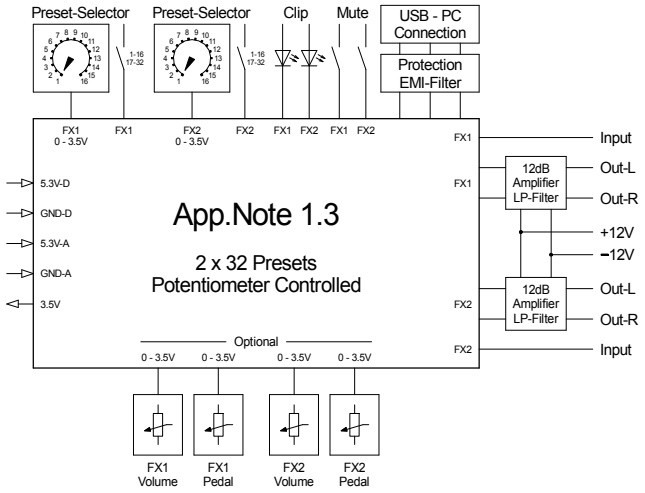

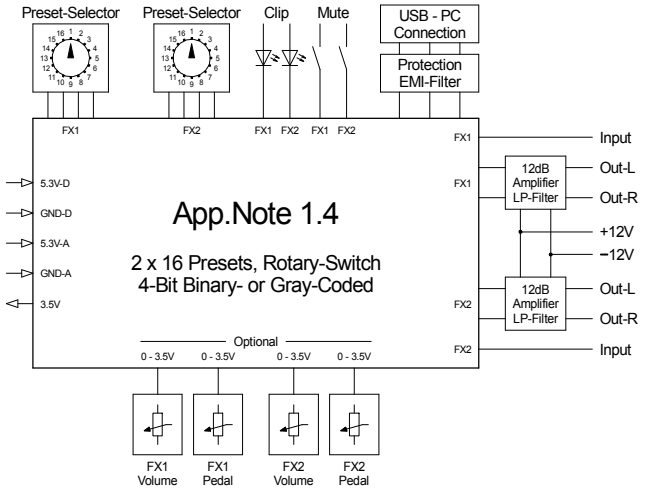

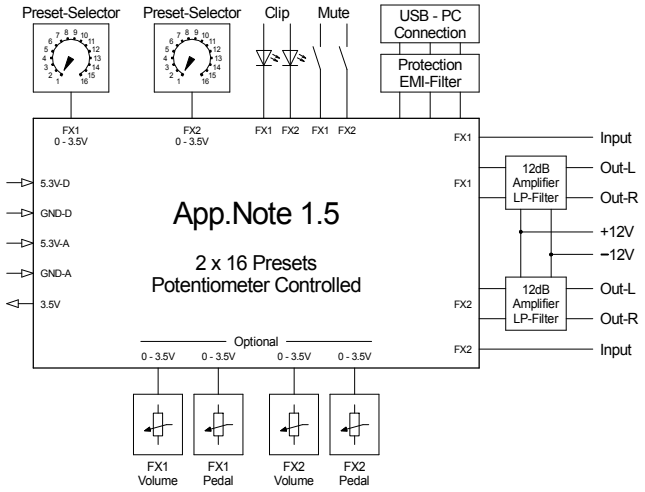

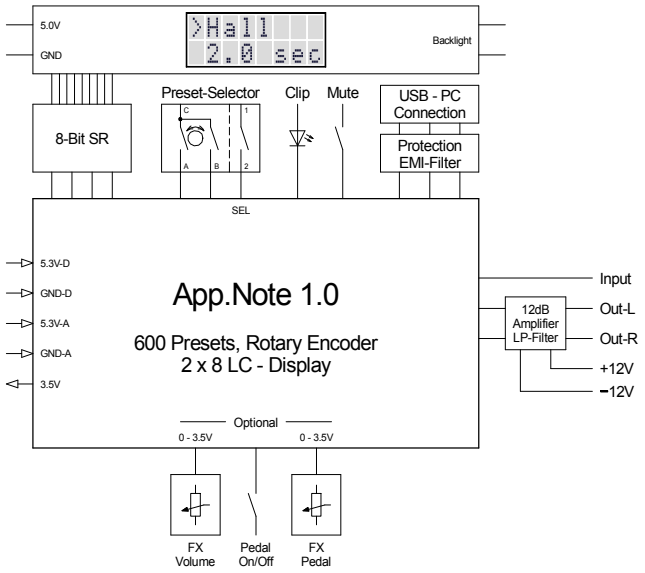
5.0V
GND
>Hall
2.0 sec
Backlight
8-Bit SR
Preset-Selector
Clip
Mute
USB - PC Connection
Protection EMI-Filter
SEL
5.3V-D
GND-D
5.3V-A
GND-A
3.5V
App.Note 1.0
600 Presets, Rotary Encoder
2 x 8 LC - Display
Input
12dB Amplifier LP-Filter
Out-L
Out-R
+12V
-12V
Optional
0 - 3.5V
0 - 3.5V
FX Volume
Pedal On/Off
FX Pedal

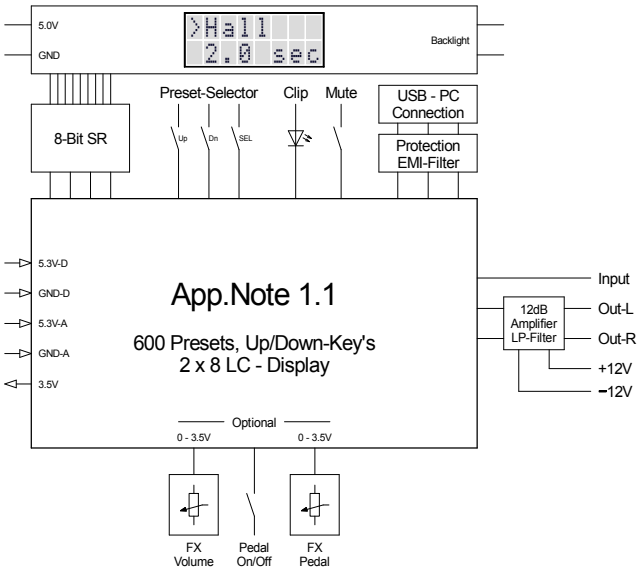
5.0V
GND
>Hall
2.0 sec
Backlight
8-Bit SR
Preset-Selector
Up
Dn
SEL
Clip
Mute
USB - PC Connection
Protection EMI-Filter
5.3V-D
GND-D
5.3V-A
GND-A
3.5V
App.Note 1.1
600 Presets, Up/Down-Key's
2 x 8 LC - Display
Input
12dB Amplifier LP-Filter
Out-L
Out-R
+12V
-12V
Optional
0 - 3.5V
0 - 3.5V
FX Volume
Pedal On/Off
FX Pedal

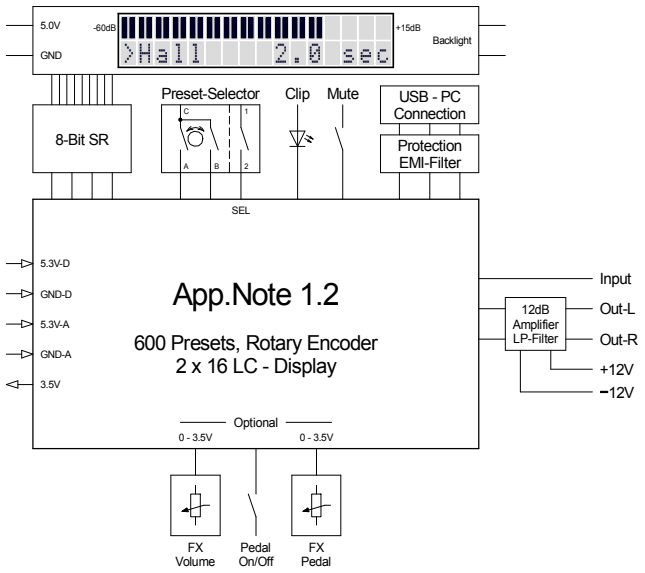
5.0V
GND
-60dB
+15dB
>Hall
2.0 sec
Backlight
8-Bit SR
Preset-Selector
Clip
Mute
USB - PC Connection
Protection EMI-Filter
SEL
5.3V-D
GND-D
5.3V-A
GND-A
3.5V
App.Note 1.2
600 Presets, Rotary Encoder
2 x 16 LC - Display
Input
12dB Amplifier LP-Filter
Out-L
Out-R
+12V
-12V
Optional
0 - 3.5V
0 - 3.5V
FX Volume
Pedal On/Off
FX Pedal

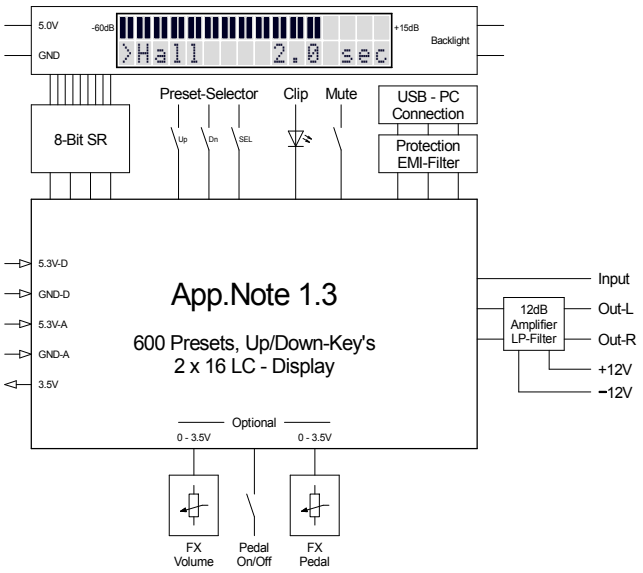
5.0V
GND
-60dB
+15dB
>Hall
2.0 sec
Backlight
8-Bit SR
Preset-Selector
Up
Dn
SEL
Clip
Mute
USB - PC Connection
Protection EMI-Filter
5.3V-D
GND-D
5.3V-A
GND-A
3.5V
App.Note 1.3
600 Presets, Up/Down-Key's
2 x 16 LC - Display
Input
12dB Amplifier LP-Filter
Out-L
Out-R
+12V
-12V
Optional
0 - 3.5V
0 - 3.5V
FX Volume
Pedal On/Off
FX Pedal

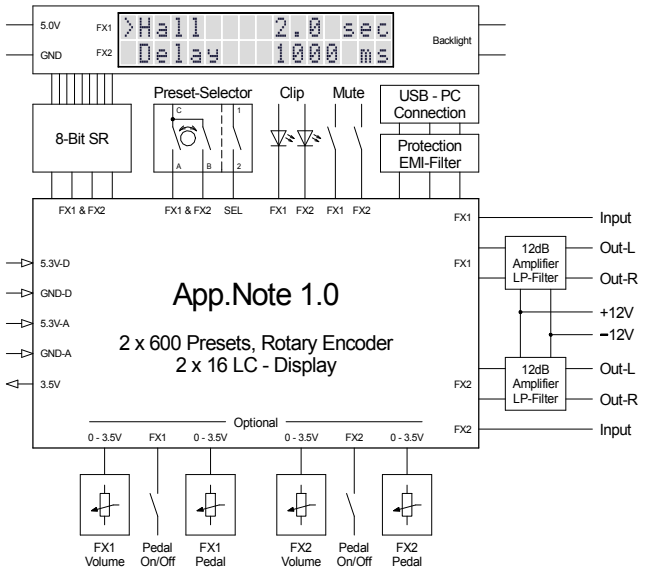
5.0V
GND
FX1
FX2
>Hall 2.0 sec
Delay 1000 ms
Backlight
8-Bit SR
Preset-Selector
Clip
Mute
USB - PC Connection
Protection EMI-Filter
FX1 & FX2
FX1 & FX2
SEL
FX1 FX2 FX1 FX2
5.3V-D
GND-D
5.3V-A
GND-A
3.5V
App.Note 1.0
2 x 600 Presets, Rotary Encoder
2 x 16 LC - Display
12dB Amplifier LP-Filter
Input
Out-L
Out-R
+12V
-12V
Optional
0 - 3.5V
FX1 Volume
Pedal On/Off
FX1 Pedal
FX2 Volume
FX2 Pedal

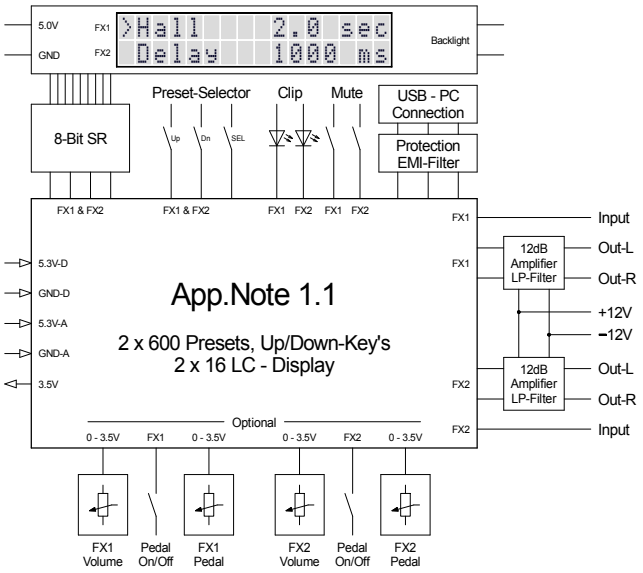
5.0V
GND
FX1
FX2
>Hall 2.0 sec
Delay 1000 ms
Backlight
8-Bit SR
Preset-Selector
Up
Dn
SEL
Clip
Mute
USB - PC Connection
Protection EMI-Filter
FX1 & FX2
FX1 & FX2
FX1 FX2 FX1 FX2
5.3V-D
GND-D
5.3V-A
GND-A
3.5V
App.Note 1.1
2 x 600 Presets, Up/Down-Key's
2 x 16 LC - Display
12dB Amplifier LP-Filter
Input
Out-L
Out-R
+12V
-12V
Optional
0 - 3.5V
FX1 Volume
Pedal On/Off
FX1 Pedal
FX2 Volume
FX2 Pedal

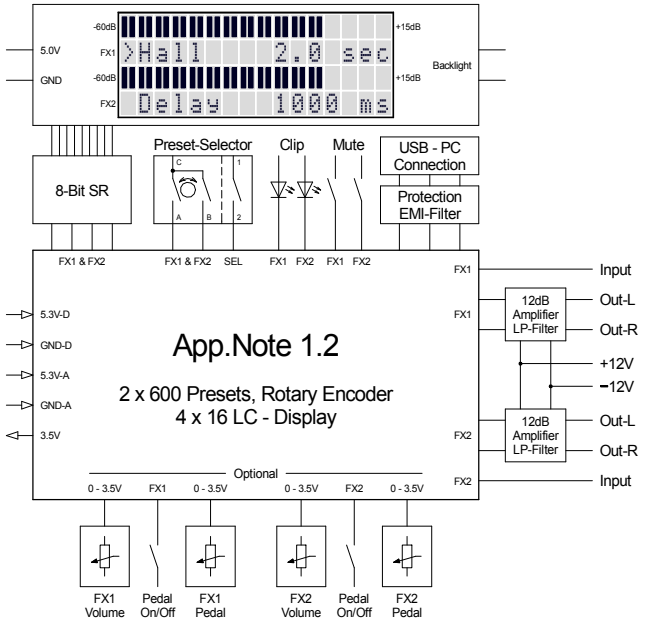
-60dB
+15dB
5.0V
GND
FX1
FX2
>Hall 2.0 sec
Delay 1000 ms
Backlight
8-Bit SR
Preset-Selector
Clip
Mute
USB - PC Connection
Protection EMI-Filter
FX1 & FX2
FX1 & FX2
SEL
FX1 FX2 FX1 FX2
5.3V-D
GND-D
5.3V-A
GND-A
3.5V
App.Note 1.2
2 x 600 Presets, Rotary Encoder
4 x 16 LC - Display
12dB Amplifier LP-Filter
Input
Out-L
Out-R
+12V
-12V
Optional
0 - 3.5V
FX1 Volume
Pedal On/Off
FX1 Pedal
FX2 Volume
FX2 Pedal

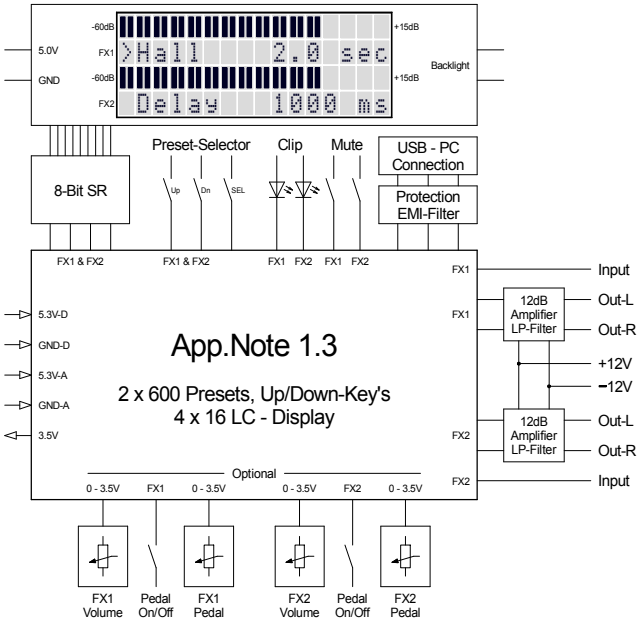
-60dB
+15dB
5.0V
GND
FX1
FX2
>Hall 2.0 sec
Delay 1000 ms
Backlight
8-Bit SR
Preset-Selector
Up
Dn
SEL
Clip
Mute
USB - PC Connection
Protection EMI-Filter
FX1 & FX2
FX1 & FX2
FX1 FX2 FX1 FX2
5.3V-D
GND-D
5.3V-A
GND-A
3.5V
App.Note 1.3
2 x 600 Presets, Up/Down-Key's
4 x 16 LC - Display
12dB Amplifier LP-Filter
Input
Out-L
Out-R
+12V
-12V
Optional
0 - 3.5V
FX1 Volume
Pedal On/Off
FX1 Pedal
FX2 Volume
FX2 Pedal